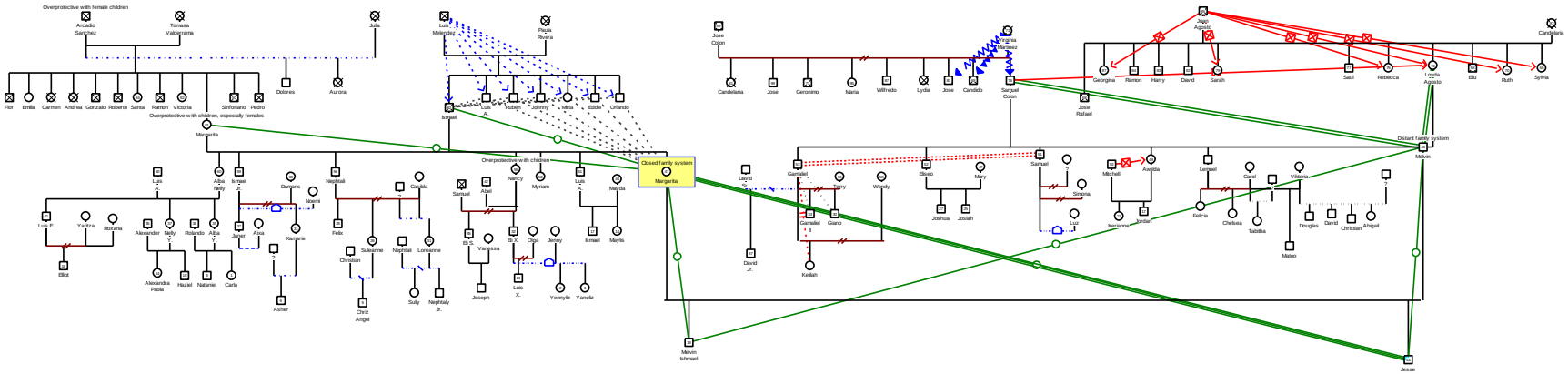

Genogram Symbols

Male | Female | Death

Family Relationships

- 16 Marriage
- 11 Divorce
- 1 Engagement
- 3 Cohabitation
- 3 Cohabitation and separation
- 3 Temporary relation / One night stand
- 2 Other or Unknown

Emotional Relationships

- 1 Cutoff / Estranged
- 2 Indifferent / Apathetic
- 12 Distant / Poor
- 3 Friendship / Close
- 3 Physical Abuse
- 7 Neglect (abuse)
- 1 Discord / Conflict
- 6 Love

136

1 Autism

1